# Phase Change Materials and PCRAM

L.P. Shi and T. C. Chong
Data Storage Institute
A*STAR (Agency for Science, Technology and Research)
Singapore

A*STAR Data Storage Institute

# Outline

- Phase Change Materials for PCRAM
- Physical Limitation and Nano-Phase Change
- PCRAM as Universal Memory

# Operation of PCRAM

## WRITE: ("1" to "0")

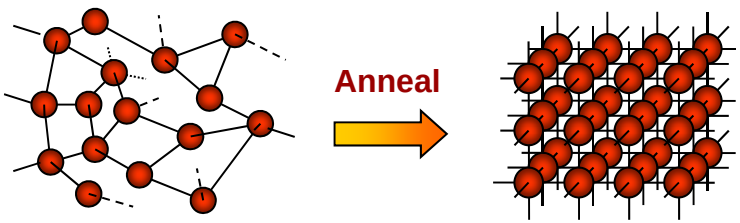


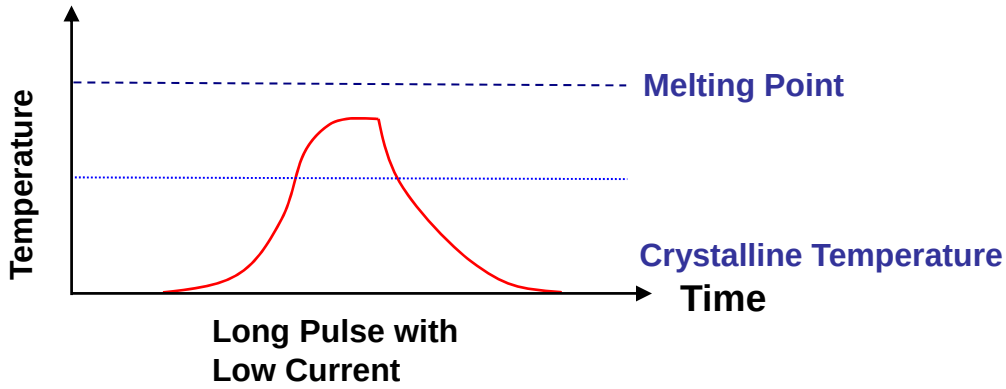


## WRITE: ("0" to "1")

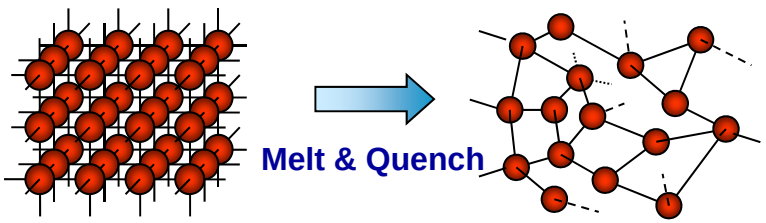


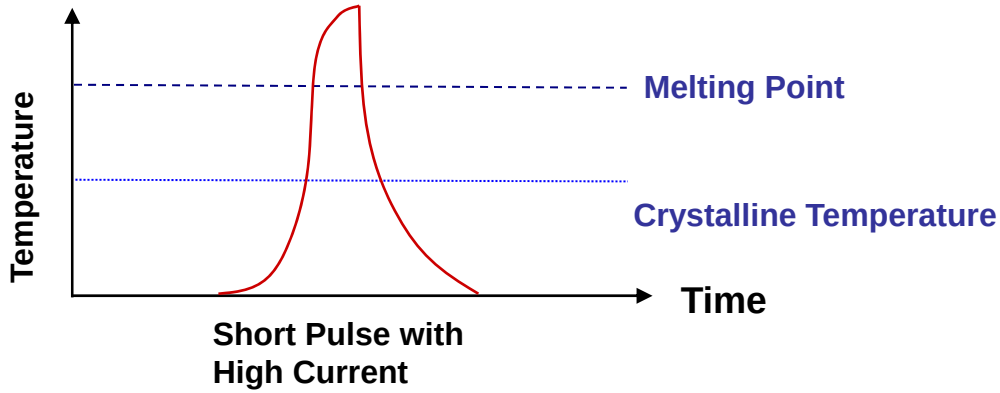


## READ

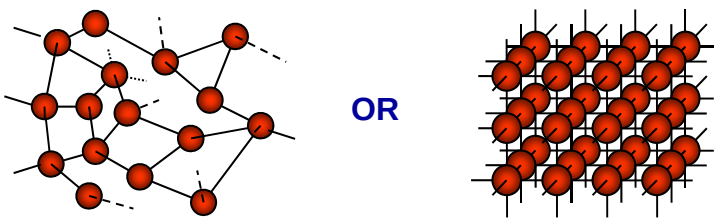


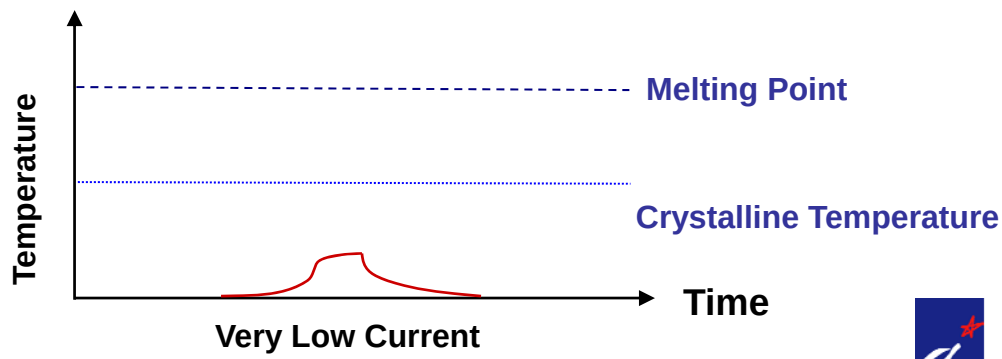


Data Storage Institute
A*STAR

# Chalcogenide Based Phase Change Materials

| Binary | Ternary | Quaternary |
|---|---|---|
| GaSb | $Ge_2Sb_2Te_5$ | AgInSbTe |
| InSb | $Ge_1Sb_2Te_4$ | BiGeSbTe |
| InSe | $Ge_1Sb_4Te_7$ | $Ge_{41}Sb_{12}Te_{41}Se_6$ |
| $As_2S_3$ | InSbTe | GeSnSbTe |
| $Sb_2Te_3$ | $SnSb_2Te_4$ | GeSbSeTe |
| GeTe | GaSeTe | $Te_{81}Ge_{15}Sb_2S_2$ |
| GeSb | $Si_2Sb_2Te_5$ | $Ge_2Sb_2Te_5$:N |

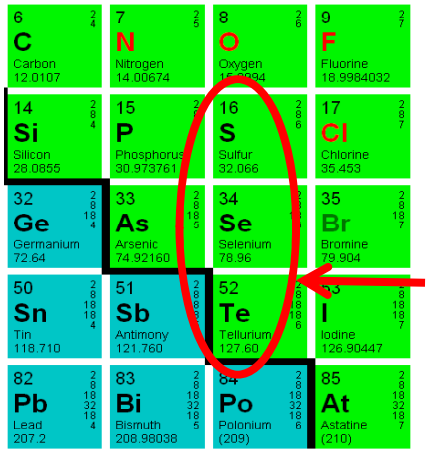


**Chalcogenide elements**

| Storage Requirement | Materials Requirement | Material Property |
|---|---|---|
| Writability | Easy amorphousing | Melting point / layer design |
| Stability | Stable amorphous phase | High activation energy |
| Readability | Large s/n ratio | High optical constant / high electrical resistance |
| Erasibility | Fast recrystallization | Simple crystalline phase, low viscosity |
| Cyclability | Stable layer stack | Low stresses |

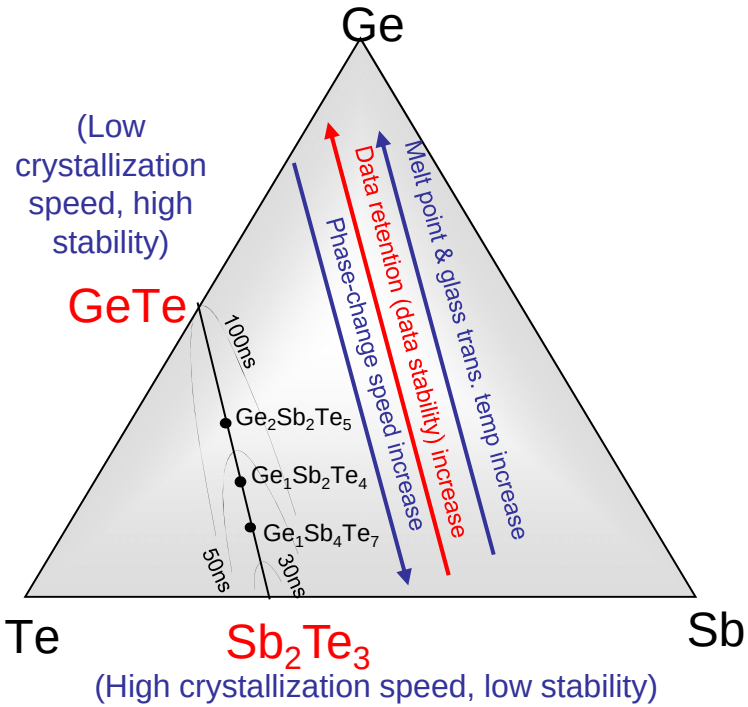

# Superlattice-like (SLL) Phase Change Structures

## Use artificial structures to engineer phase change materials' properties

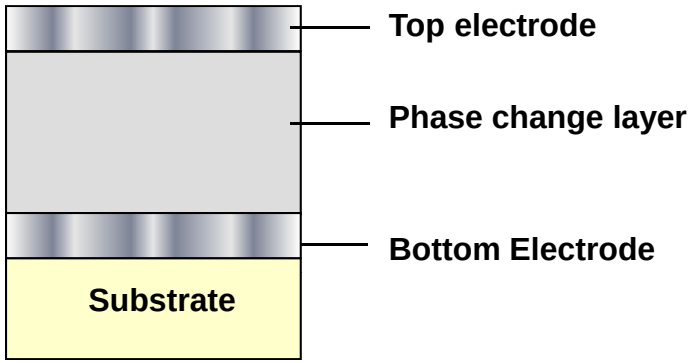


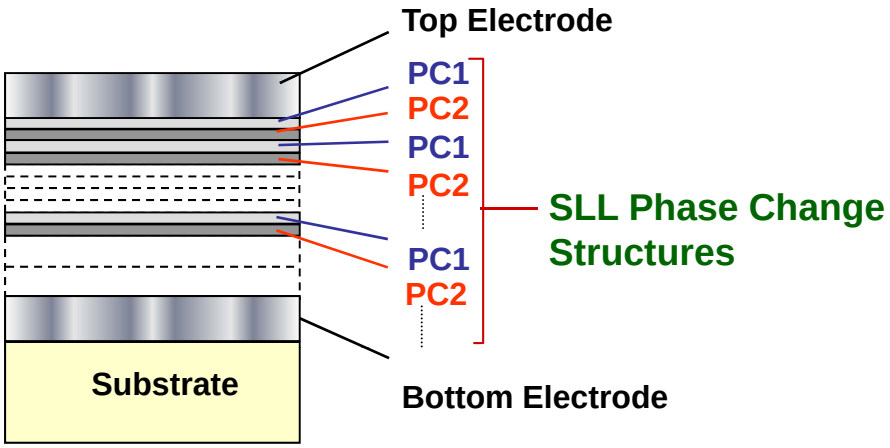


### Theoretical consideration:

- Material consideration
- Crystallization consideration
- Thermal consideration
- Electrical consideration

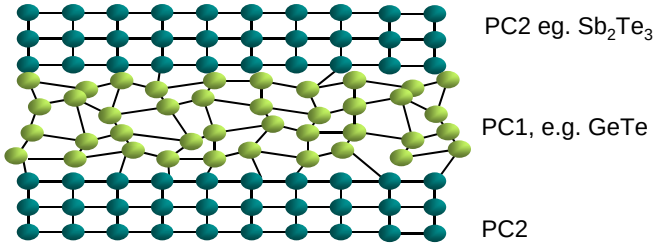


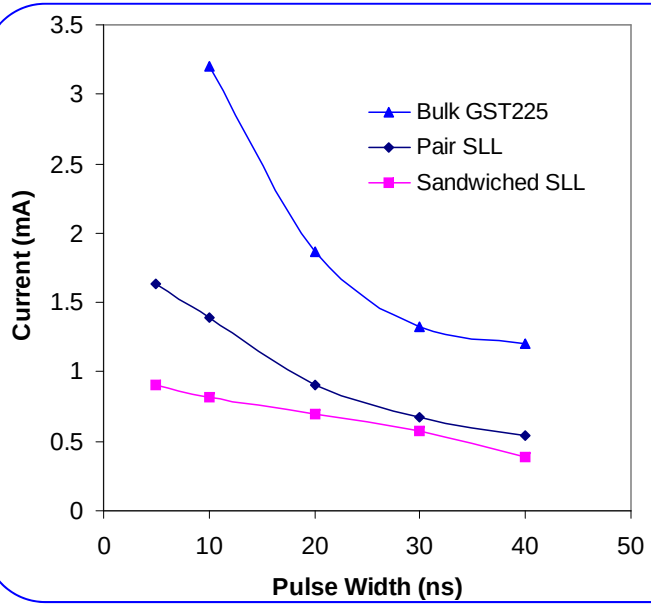


- **Reduce 70% Current**
- **Increase Speed**


1. *T.C. Chong, etal. "Phase change random access memory cell with superlattice like structure", Applied Physics Letters, Vol. 88, No.12, (2006).*
2. *T.C. Chong, etal, "Crystalline Amorphous Semiconductor Superlattice" Phys Rev Lett, 100, (2008)*

# Scalability of PCRAM

- **Scalability of PCRAM** - the smallest volume of phase change materials that undergoes stable and reversible phase change

- **Nano-Phase Change** - phase change behavior at the nano-scale is different from bulk due to large volume of interfaces:
  - Thickness (size) dependent
  - Interface dominated
  - Capping materials related

- **Important Factors**:
  - Ratio of the atoms on interface/atoms in volume
  - Mean free path

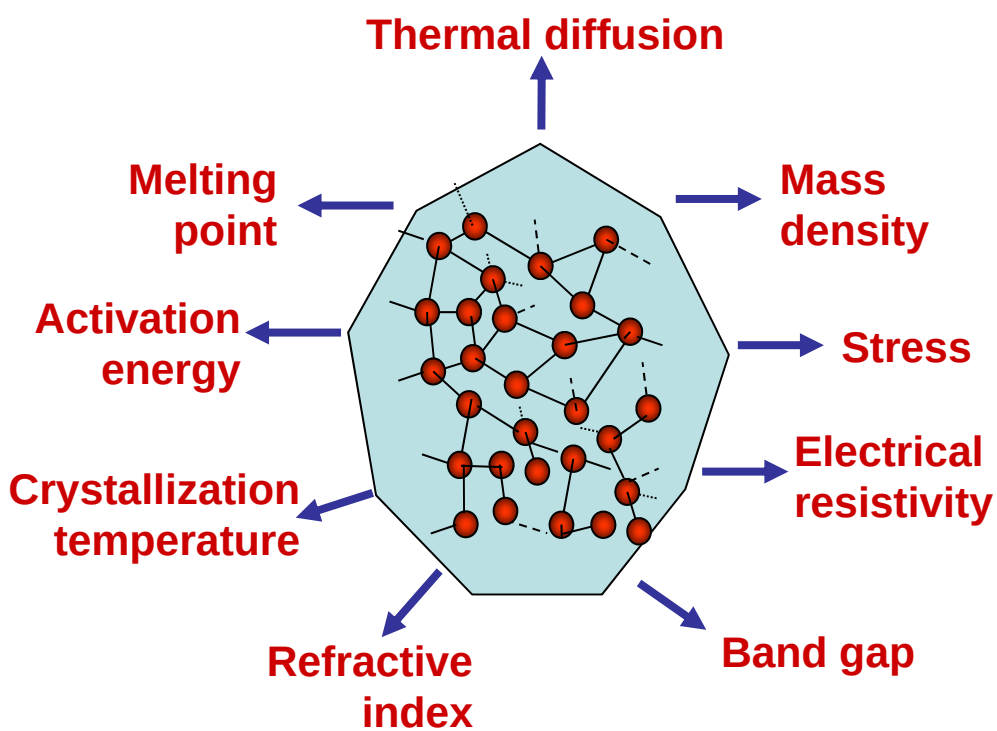


*L.P. Shi, T.C. Chong, "Nano-phase change for data storage" J. nanoscience & nanotechnology, 7, 65-93 (2007).*



Data Storage Institute
A*STAR

# Physical Limitation vs. Nano-Phase Change

**How small?**
**lithography**

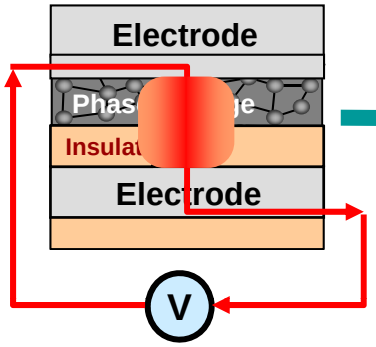


**How small?**
**Reversible Phase Change**

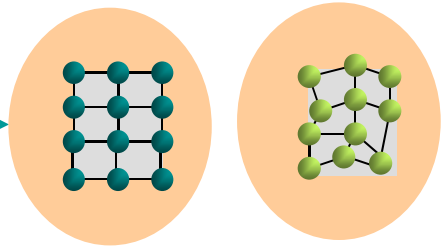

**How small?**
**Current**

**How small?**
**Cross-talk**

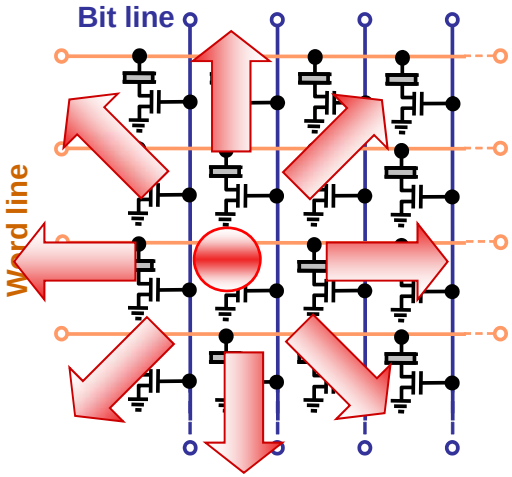


## Phase Change

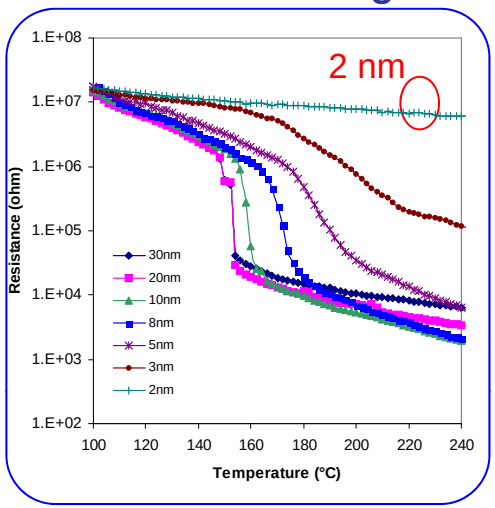


## Operation Window

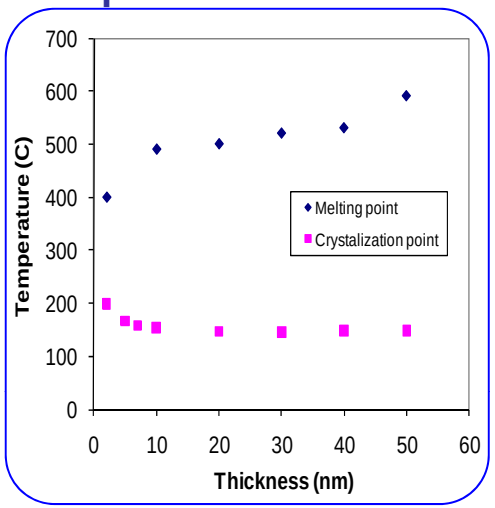


## Density

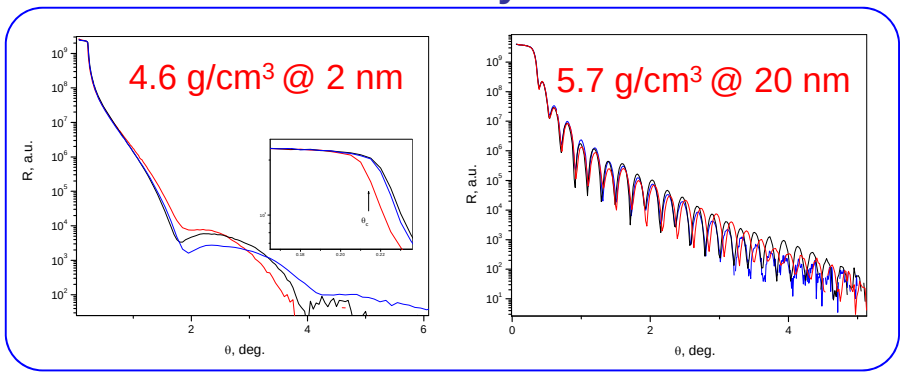


## Diffusion

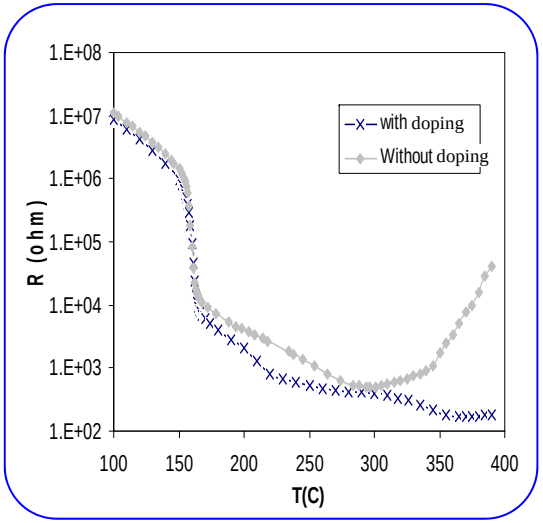


**Limitation of PCRAM:**
**~ 5 nm**



Data Storage Institute
A*STAR

# PCRAM as Universal Memory

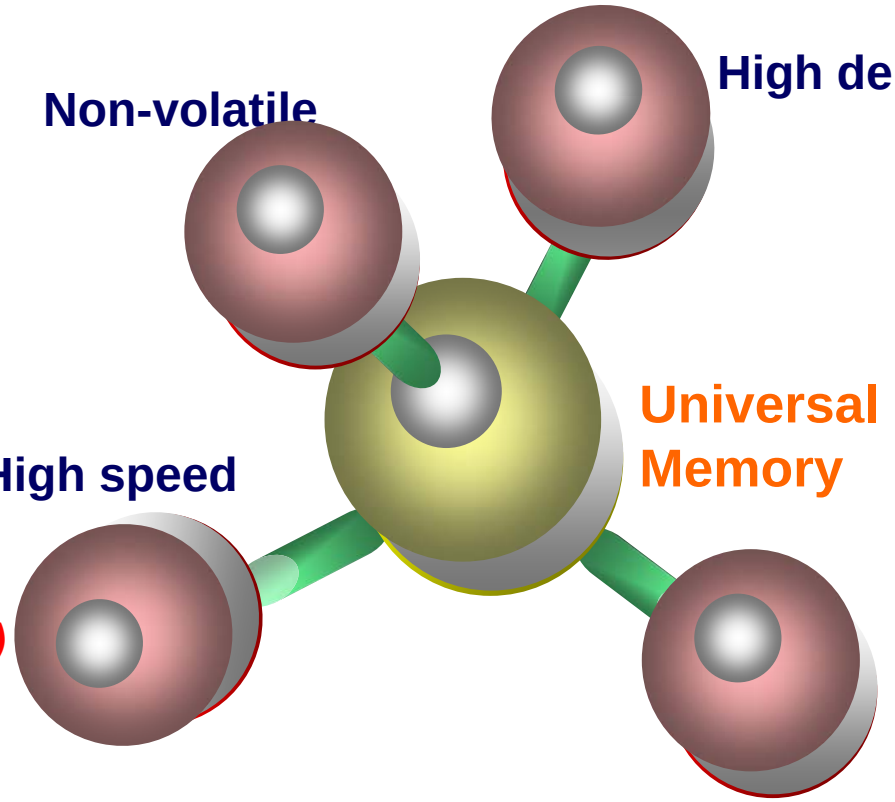




Data Storage Institute
A*STAR

# High Speed PCRAM

**Correlation between Phase Change Speed and Size**

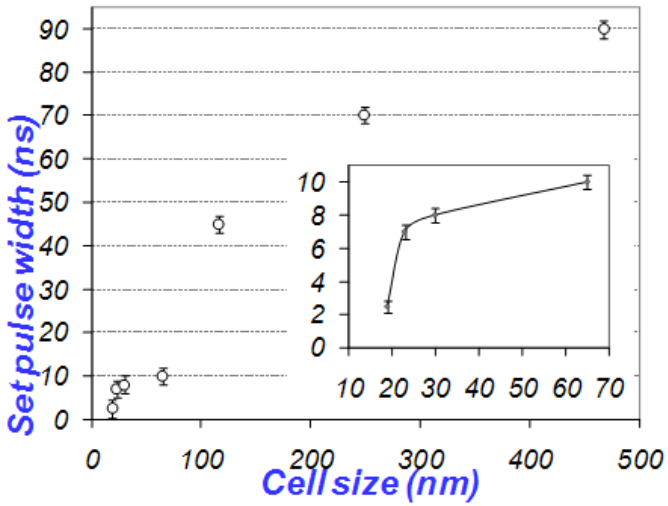


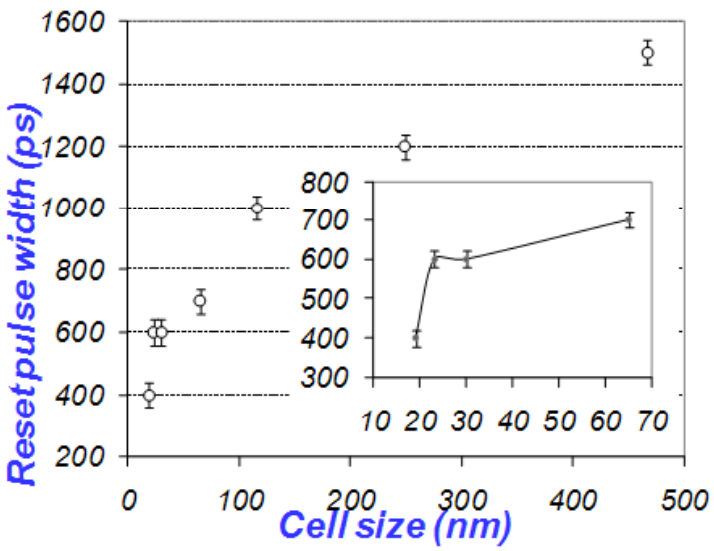


**High Speed PCRAM with $10^8$ cycles**

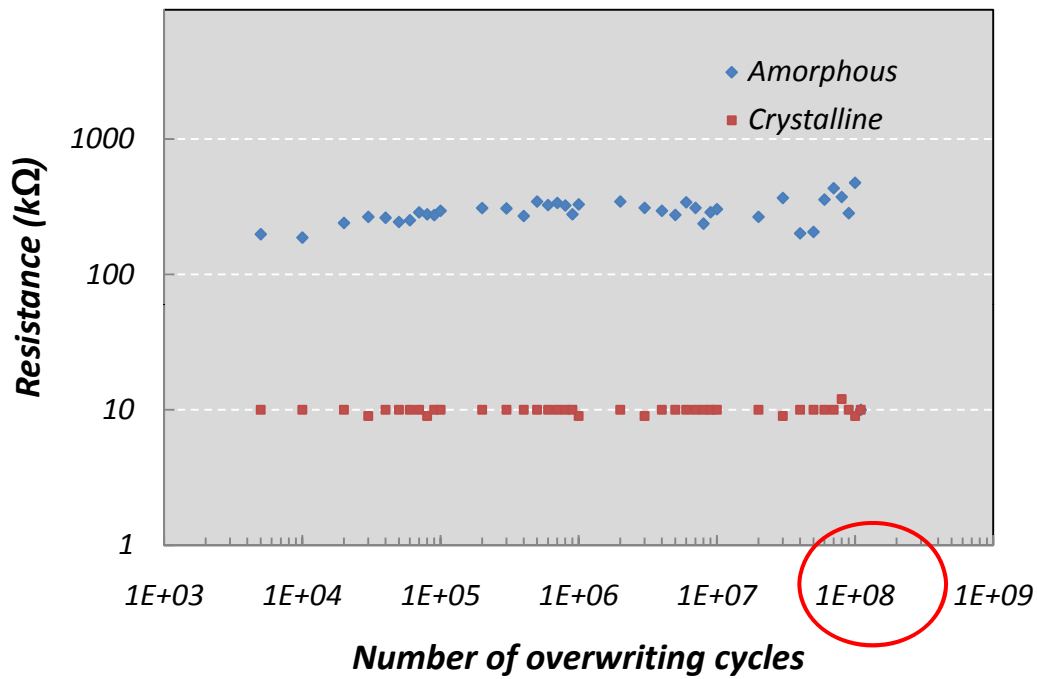


Reset pulse width: 6 ns

Set pulse width: 9 ns

*W. J. Wang, etal., "Fast phase transitions induced by picosecond electrical pulses on phase change memory cells", APL, 93, (2008).*



Data Storage Institute
A*STAR

# Thank You

# Nano-scaling Effects on Small Cells

*Smaller dimension change the boundary conditions, the material properties due to the nano-size effect and interface effect, resulting in the changes of the electrical performance*

- Cell structure
- Boundary condition
- Thermal confinement
- New switching mechanisms

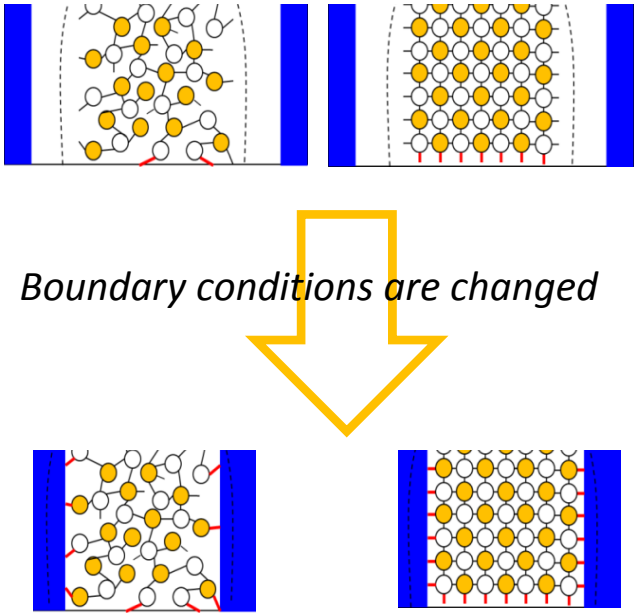


- Nano phase change
- Phase change temperature
- Melting point
- Crystallization stress
- Free carrier concentration
- Carrier diffusion
- Phonon diffusion

- Switching power
- Switching speed
- Life time
- retention

# PCRAM Introduction

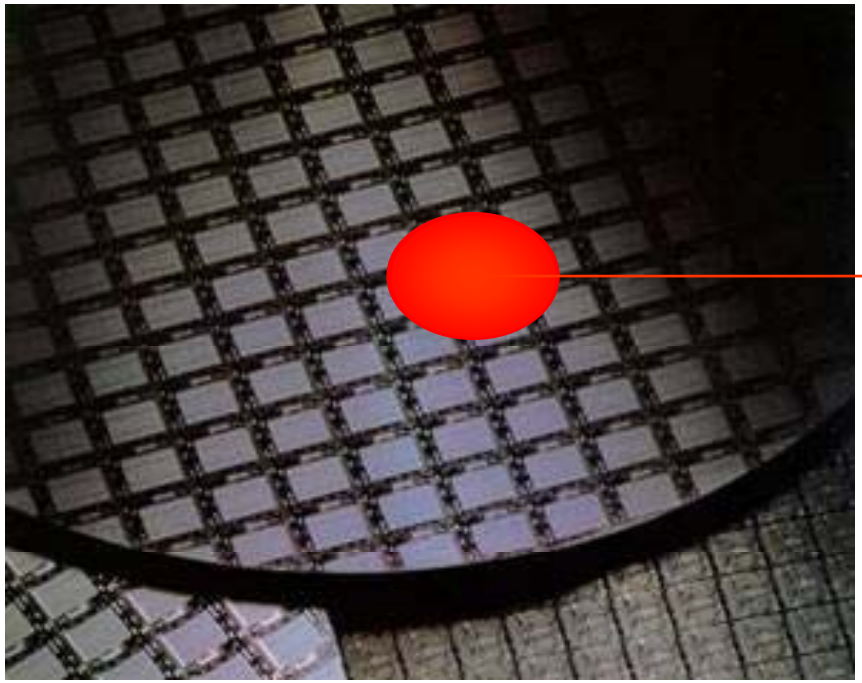

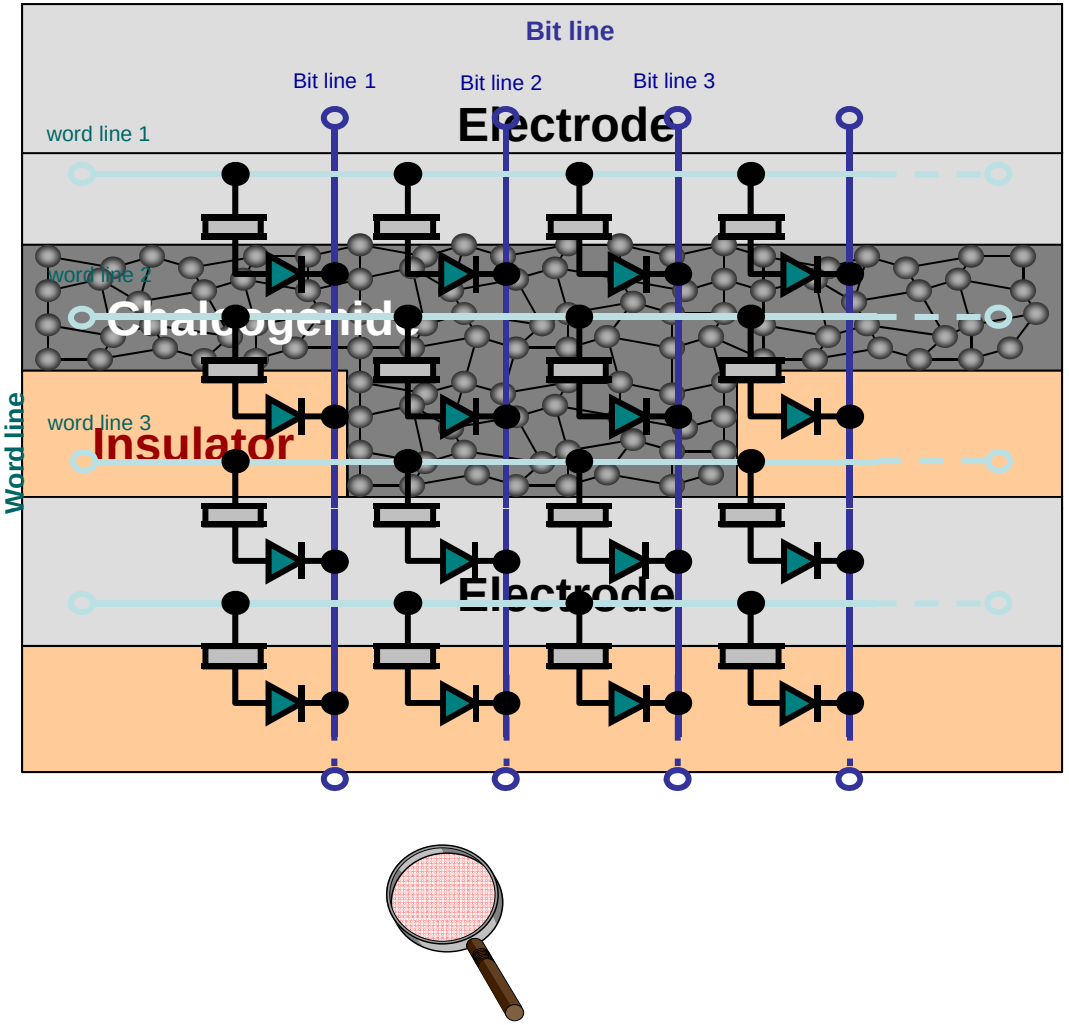

# PCRAM Introduction

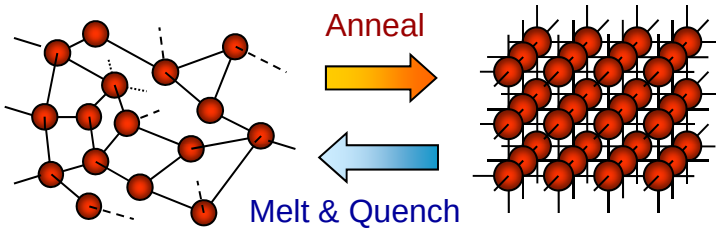


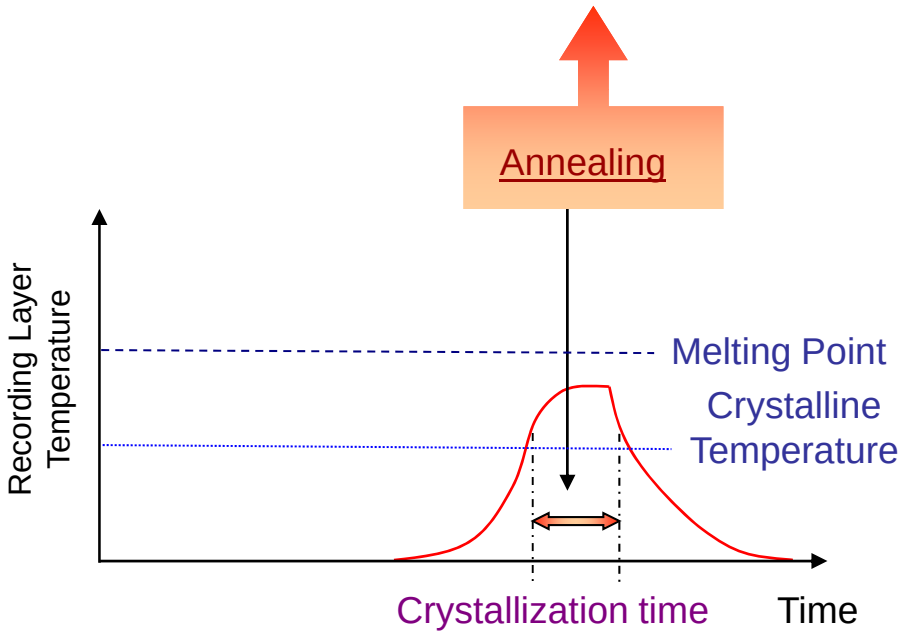


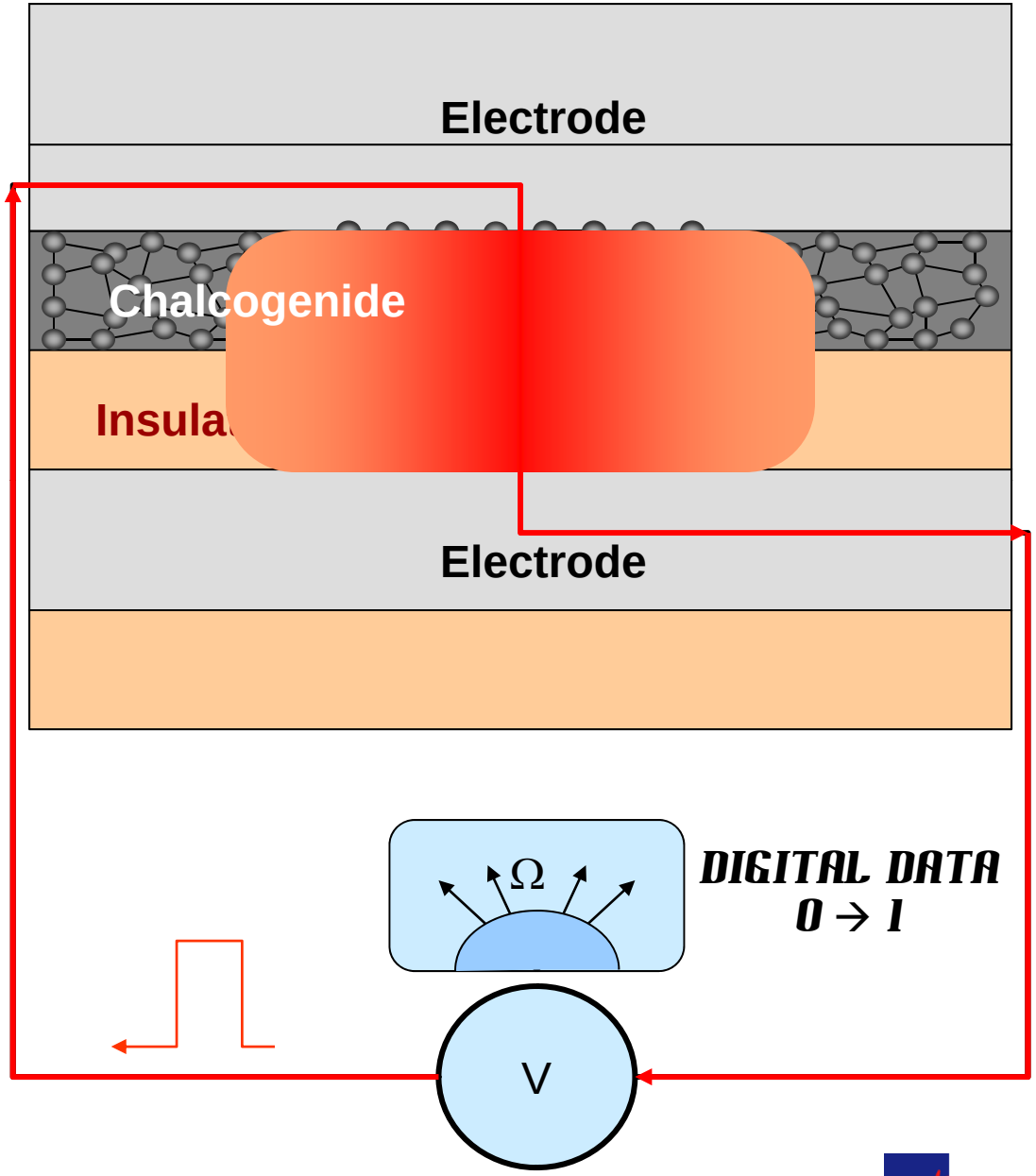


- At amorphous state
  - High resistance
- At crystalline state
  - High free electron density
  - Low resistance

# PCRAM Introduction

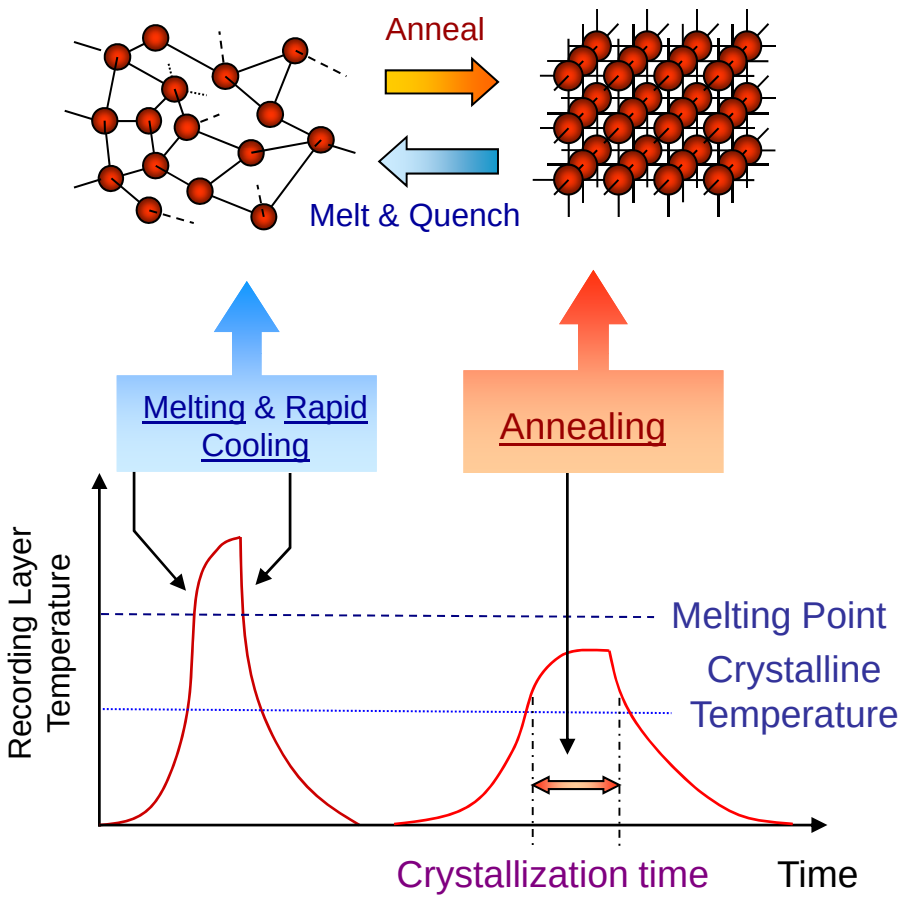


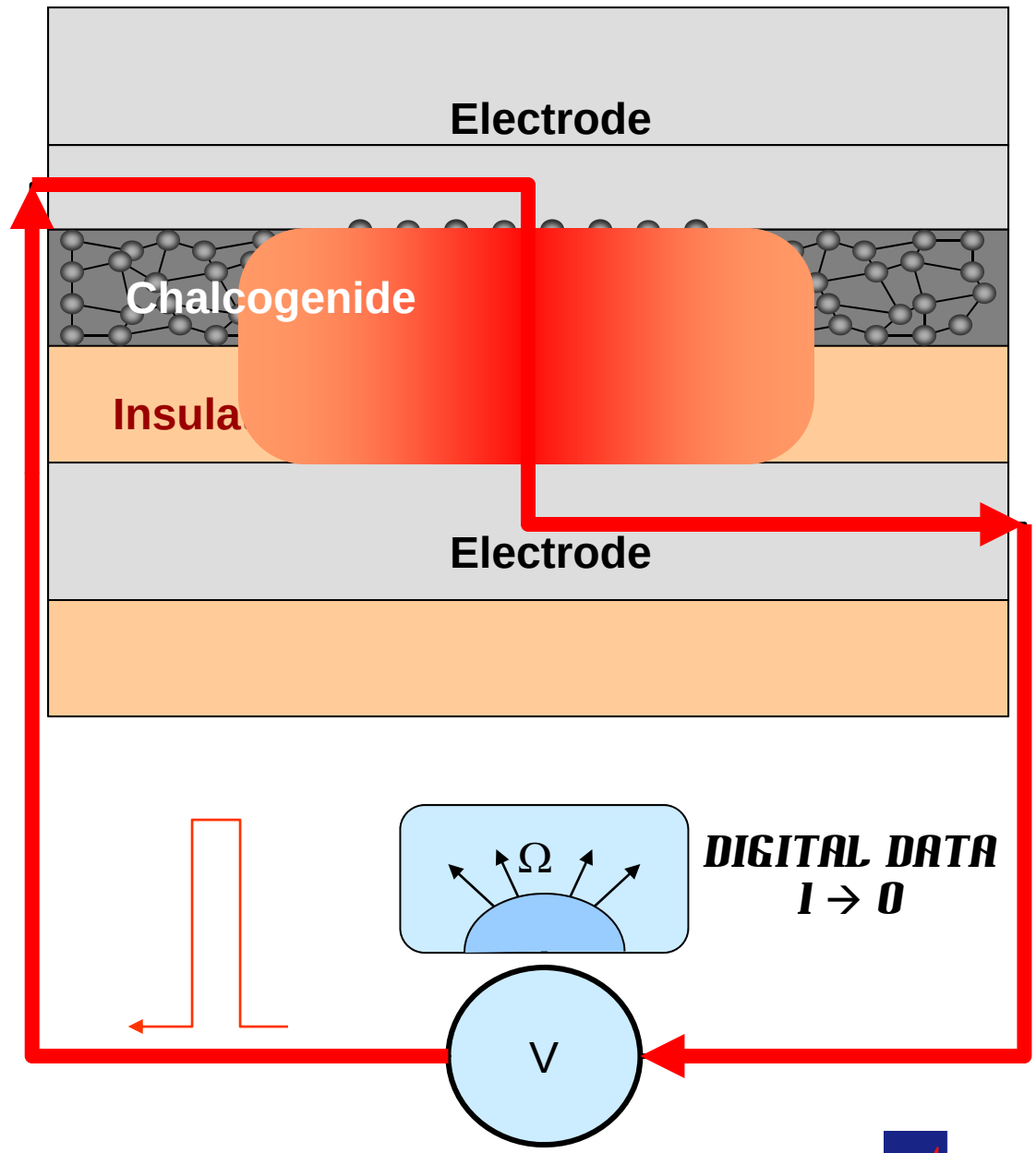


- The resistance difference is several orders. Cell read by measuring resistance
  - High free electron density
  - Low resistance
  - Amorphous state

# High Scalability

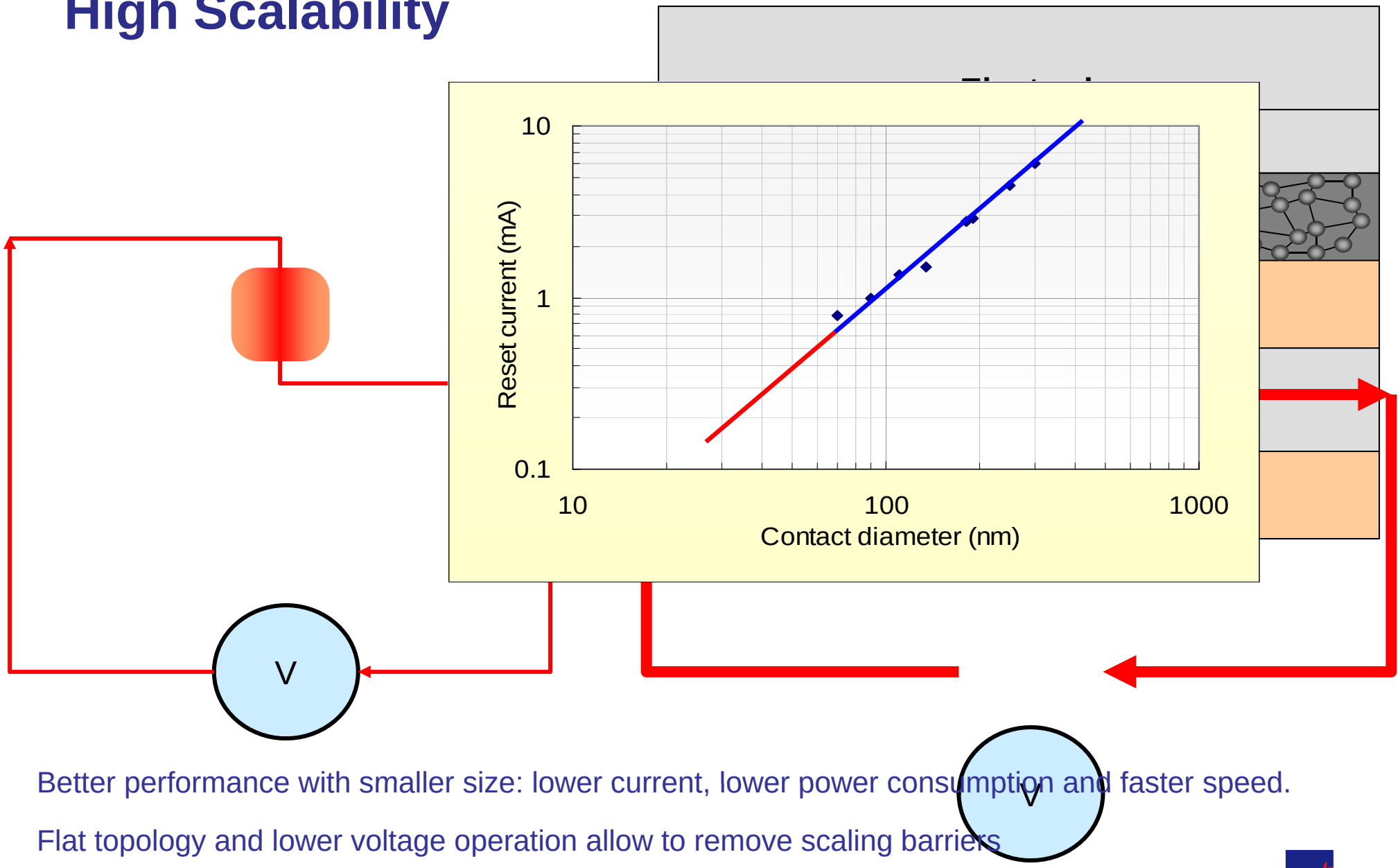


- Better performance with smaller size: lower current, lower power consumption and faster speed.
- Flat topology and lower voltage operation allow to remove scaling barriers